FILTRE À RÉTROLAVAGE MX

Collectif et Industriel

Caractéristiques techniques

Pression nominale PN 16
Température d'eau max. 90 °C
Raccordement à l'égout min. DN 50
Branchement électrique 230 V, 50 Hz
certification DVGW

FILTRE À RÉTROLAVAGE AUTOMATISÉ MXA

Collectif et Industriel

Caractéristiques techniques

Pression nominale PN 16
Température d'eau max. 90 °C
Raccordement à l'égout min. DN 50
Branchement électrique 230 V, 50 Hz
certification DVGW

Filtre de protection manuel avec rétrolavage selon DIN 806-2 pour la filtration de l'eau potable.Toutes les pièces en contact avec le produit en laiton résistant au dégagement de zinc ou en matières plastiques industrielles de première qualité.

Elément filtrant modulaire en matières plastiques industrielles de première qualité avec structure en acier inox, niveau de filtration 100 µm, brosses de raclage pour le nettoyage mécanique supplémentaire de la cartouche filtrante pendant le rétrolavage, y compris raccordement d'eau de lavage pour la fixation du tuyau HT DN 50,
Modèle automatique MXA équipé d'une unité d'entrainement intégrée et d'une commande de programmation libre
Possibilité de programmation par différence de pression et chronométrique pour le rétrolavage.

MX/MXA et raccordement (R)	1"	1 1/4"	1 1/2"	2"
Débit nominal, $\Delta p = 0{,}2\ (0{,}5)$ bar [m³/h]	8,5 (13)	12,0 (18,5)	22,0 (30)	27,0 (38,5)
Valeur K_V [m³/h]	18,0	25,0	46,0	56,0
Longueur hors tout sans raccords [mm]	190	190	206	206
Longueur hors tout avec raccords [mm]	276	281	342	323
Référence MX (RG 8)	**107 400**	**107 405**	**107 410**	**107 415**
Référence MXA (RG 8)	**107 450**	**107 455**	**107 460**	**107 465**

MX/MXA et raccordement (DN)	65	80	100
Débit nominal, $\Delta p = 0{,}2\ (0{,}5)$ bar [m³/h]	33 (55,5)	60 (96,5)	66 (98)
Valeur K_V [m³/h]	69,0	124,0	138,0
Longueur hors tout sans contre brides [mm]	220	250	250
Référence (RG 13) MX	**107 420**	**107 425**	**107 430**
Référence (RG 13) MXA	**107 470**	**107 475**	**107 480**

IDEEAU
water treatment company

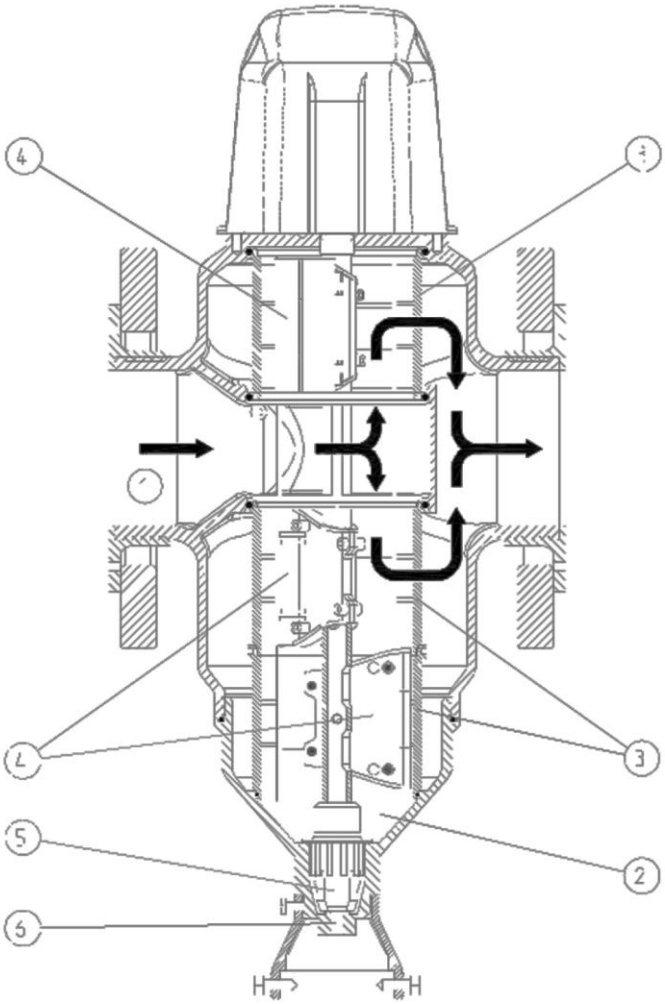

Fig. C-1: Full sectional view with arrows indicating flow direction and item numbers

MXA 1“ – MXA DN 100

Principle of Operation and Functional Description of the Filter Unit

Unfiltered raw water reaches the filter via the connection (item 1),flows through the filter element (item 3) from the inside to the out-side and is filtrated thereby. Impurities adhere to the filter element.
Larger and heavier dirt particles settle at the bottom of filter cylinder(item 2).
The drive unit on the filter top carries out the backwash process byturning the backwash nozzle (item 4) and lifting the lower drain nozzle (item 5), thus opening the drain outlet (item 6). During the rotary movement, the backwash nozzle brushes over the filter surface radially, the filter element is cleaned.
The coarse impurities removed by the backwash nozzle (item 4) and those having already settled in the filter cylinder (item 2) during the filtration process are washed out.
The backwash proceeds by a reversal of the flow direction, i.e. filtrated water passes through the filterelement from the outside to theinside via the backwash nozzle (item 4). Only those areas arecleaned where the backwash nozzle is actually moving over.

Note:

During the backwash process, the supply of filtrated water is maintained.

Technical Data/Specifications

Table C-1: Technical Data		Backwash Filter, Type MXA						
		1"	1¼ "	1½ "	2"	DN 65	DN 80	DN 100
Connection data								
Nominal connection size	[DN]	25	32	40	50	65	80	100
Drain connection HT pipe	[DN]	50						
Electrical data		230 V / 24 V / 50 Hz / 10 VA						
Protection system		IP 54						
Performance data								
Flow rate at 0.2 bar pressure loss	[m³/h]	8.5	12	22	27	33	60	66
K_V value	[m³/h]	18	25	46	56	69	124	138
Filter fineness	[µm]	100						
Upper filtration fineness acc.to DIN 19632	[µm]	110						
Lower filtration fineness acc. to DIN 19632	[µm]	90						
Nominal pressure (PN)	[bar]	16						
Min. flow pressure	[bar]	2						
Max. operating pressure at water temperature	[bar/°C]	10/90						
Differential pressure release	[bar]	approx. 0.4 – 0.5						
Consumption data								
Quantity of backwash water at 3 bar water pressure and backwash time of 1,5 min., approx.	[l]	40						
Max. backwash volume flow at 9 bar, approx.	[m³/h]	4						
Dimensions and weights								
A: Installation length without screw connections	[mm]	190	190	206	206	-	-	-
B: Installation length with screw connections	[mm]	276	281	342	323	-	-	-
B: Installation length without counter flanges; flanges PN 16 acc. to DIN	[mm]	-	-	-	-	220	250	250
C: Min. distance to wall	[mm]	90	90	90	90	100	103	110
D: Overall height above connection centre	[mm]	153	153	233	233	233	243	243
E: Overall height filter bottom to connection centre	[mm]	194	194	212	212	212	302	302
F: Total height	[mm]	347	347	445	445	445	545	545
G: Space above filter top	[mm]	130						
H: Space required for replacing filter element	[mm]	100	100	minimum 100 optimum 215			minimum 100 optimum 315	
I: Hole circle diameter of flange	[mm]	-	-	-	-	145	160	180
J: Max. seal face	[mm]	-	-	-	-	122	140	158
K: Number of screws M16	[pc.]	-	-	-	-	4	8	8
Weight empty with control unit GENO®-RS-tronic, approx.	[kg]	8.6	8.7	12.7	12.7	14.8	19	20
Test mark/certification code								
DIN/DVGW certification code		NW-9301BO0194						
Environmental data								
Max. water temperature	[°C]	90						
Max. ambient temperature	[°C]	40						
Ordering no.		**107 450**	**107 455**	**107 460**	**107 465**	**107 470**	**107 475**	**107 480**

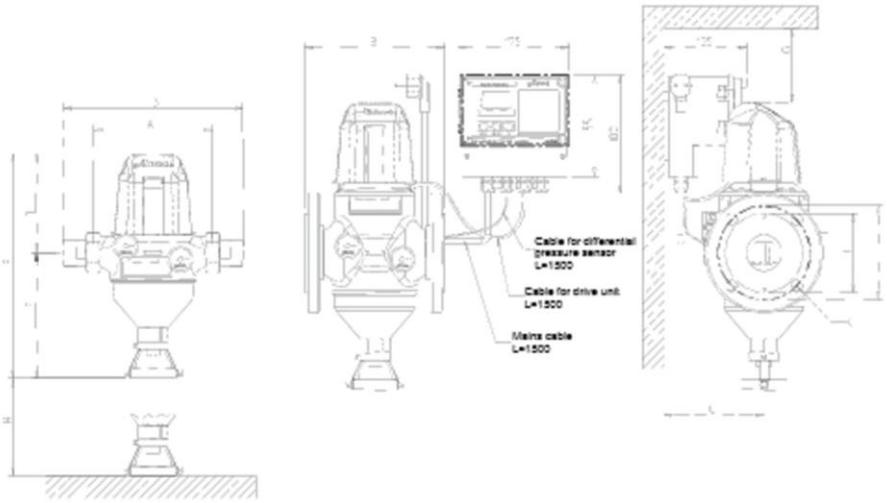

Fig. C-2: Dimensional drawing of GENO backwash filter MXA

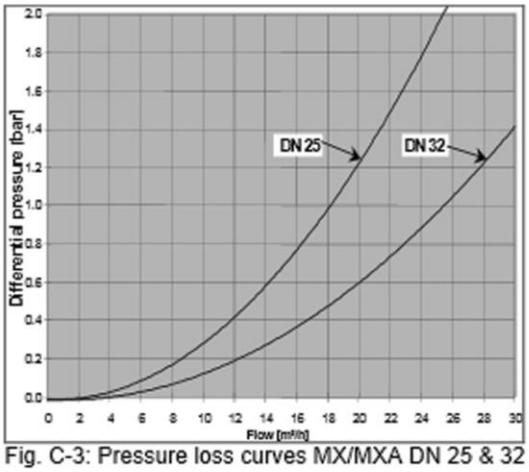

Fig. C-3: Pressure loss curves MX/MXA DN 25 & 32

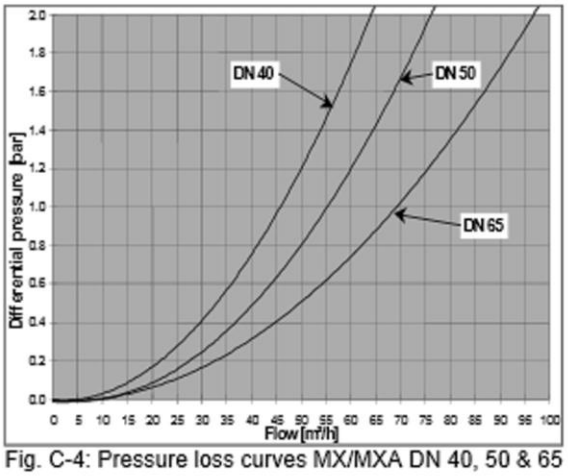

Fig. C-4: Pressure loss curves MX/MXA DN 40, 50 & 65

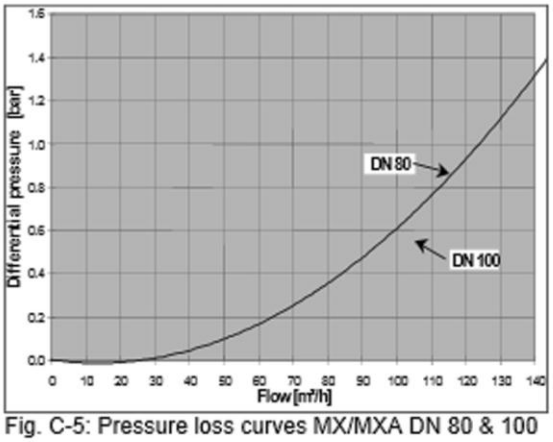

Fig. C-5: Pressure loss curves MX/MXA DN 80 & 100

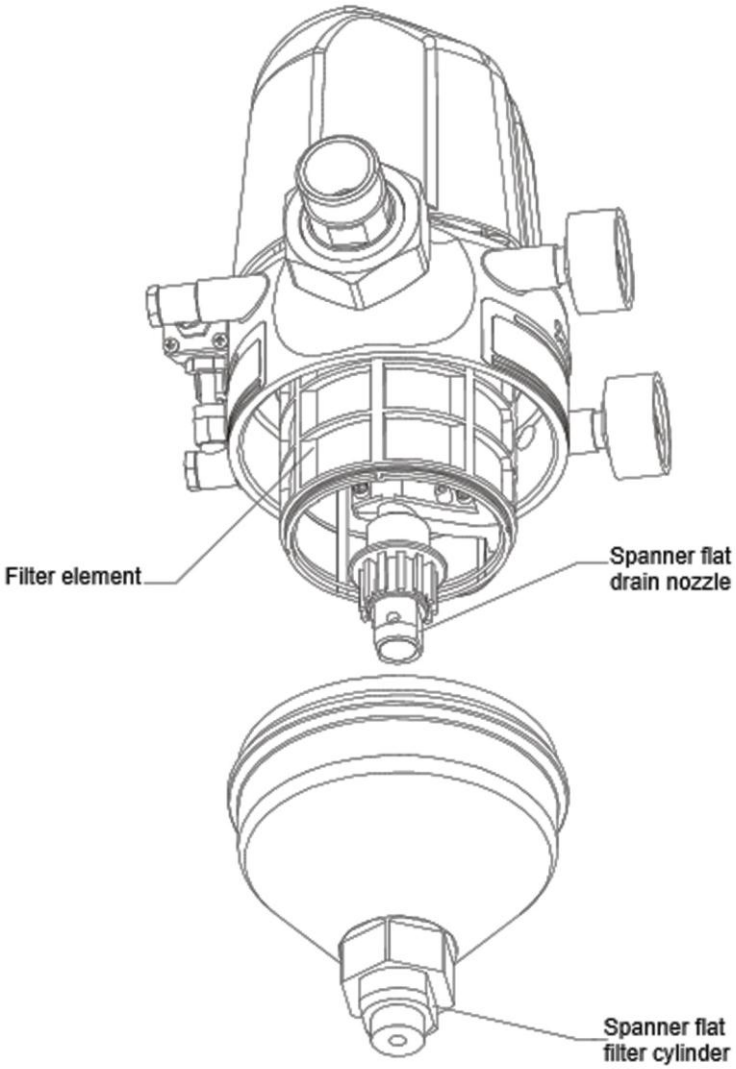

Fig. H-3: Mount filter cylinder

- Start up backwash filter:
  The backwash filter can be started up again according to the instructions in chapter E, Starting up.

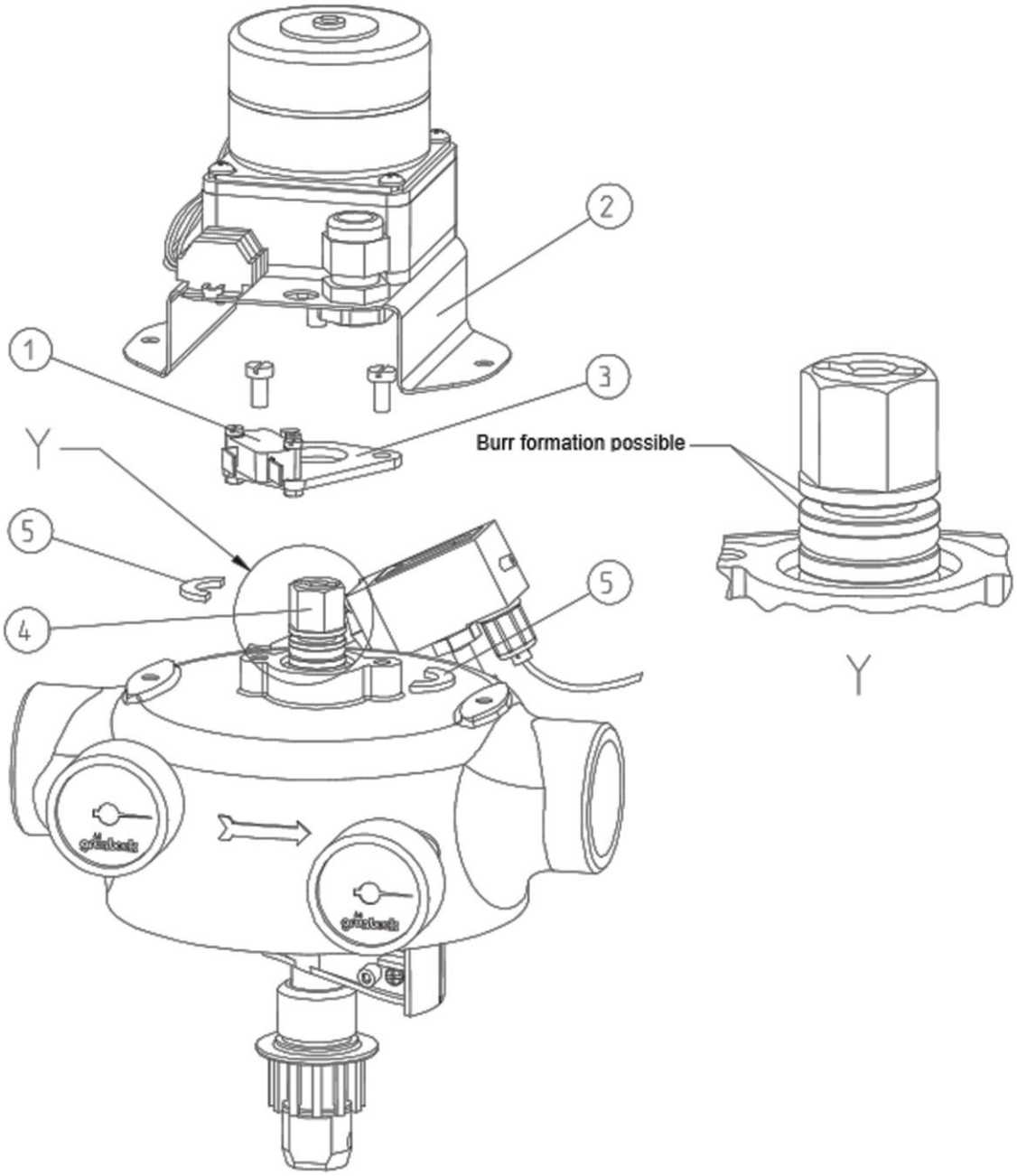

Fig. H-4 Drawing with item numbers for dismounting pipe nozzle

Spare Parts

Note: Please also note the General Terms of Warranty (see chapter A-2).

Spare parts and consumption material can be ordered from your regional agency (see attached directory) or by authorised specialist companies.

In operation, various parts are subject to a certain degree of wear or ageing.

Wear parts are:

drain nozzle (item 1), pipe nozzle (item 2), filter element (item 3), O-ring sealing pipe nozzle/casing (item 4)

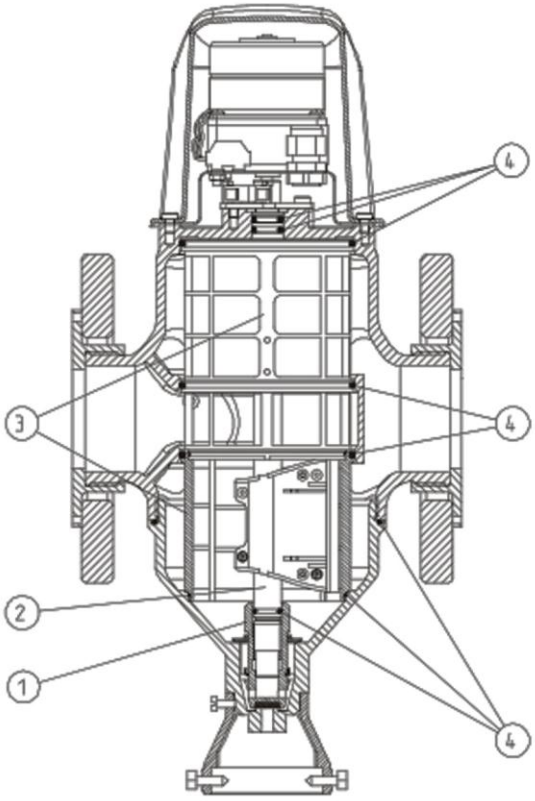

Fig. H-5 Sectional drawing of wear parts with item numbers

Note: Although these are wear parts, we grant a limited warranty period of six months.

Note: In the case of power failure or failure of the transformer fuse during the backwash process, it will not be completed automatically anymore. Any inadmissible leakage of water caused thereby can be avoided by installing a safety valve (refer to chapter 6.2, Accessories). It must be noted, however, that a power failure during an ongoing backwash process can almost be excluded.

Principle of Operation and Functional Description of the GENO®-RS-tronic Controller

There are four different possibilities to initiate the backwash process: time interval, differential pressure (can be switched off), external signal and manual release.

The time interval can be set between 1 hour and 99 days. For interval duration >= 1 day, the starting time can be programmed additionally. The time interval is generally active. Furthermore an off-period can be activated during which backwash will not take place at all. Before and after the off-period, the backwash process will be carried out automatically.

The differential pressure sensor measures the differential pressure between filter inlet and outlet and initiates a backwash process if approximately 0.4 bar are exceeded. The differential pressure evaluation can be switched off.

It is also possible to start the backwash process via an external voltage-free contact. The input can also be reprogrammed for external backwash locking.

The backwash process proceeds as follows: A servomotor opens the drain valve, by initially clocking ten times and then rotating continuously. The rotation is controlled by means of a micro-switch. After a sufficient number of micro-switch pulses has been counted, the sense of rotation is reversed and the drain valve is closed again. Also during the closing process the micro-switch pulses are counted. If the rotation is blocked due to dirt or wear, the controller will detect the problem and try to “solve” it automatically, if possible. In case this is not successful, corresponding error messages will be given (refer to chapter G, Troubleshooting).

For remote control, a voltage-free error signalling contact is available as well as a voltage-free contact signalling an ongoing backwash process. The controller monitors the number of backwash processes and, possibly in connection with a maintenance time interval, informs about the remaining backwash processes in the current maintenance interval by means of a bar graph shown on the display.

Basic Information

1 Laws, Regulations, Standards

When handling drinking water, certain rules are unavoidable for the sake of health protection. These operating instructions take the applicable regulations into account and give you all the directions required for the safe operation of your water treatment system.

Among other things the rules prescribe that

- only authorised specialist companies are allowed to modify water supply equipment substantially.
- checks, inspections and maintenance works of installed devices must be carried out regularly.

2 Protection of Drinking Water

Drinking water is still the most important food which cannot be replaced by anything else. Also in trade and industry, water or drinking water is vital.

For the protection of drinking water those parties who are involved directly, such as water supply companies, system mounting companies (plumbers) and users are forced to observe legal and technical regulations.

Dirt getting into the drinking water supply due to construction works or damages is not only unpleasant, but may also have dangerous consequences, since deposits are a potential place especially for germs, such as viruses and bacteria, to settle and breed. Dirt, small solid particles, as e.g. small rust particles or grains of sand, may cause corrosion and malfunction of the piping and fittings. For these reasons the German standard DIN 1988 prescribes the integration of filters in domestic water installations made of metal and copper pipes. It is recommended also in the case of plastic pipes. Grünbeck filters offer a persistently safe protection against dirt particles in drinking water.

3 Filtration

The filtration principle is based on nature. When rainwater passes through the individual layers of earth into the ground water, coarse impurities are held back in the soil. While the filtration speed in nature is very slow and the retained impurities cannot be removed, technical filters can either be backwashed or dirty filter elements can be replaced.

Product Description

1 Type Designation Plate

The type designation plate is located at the casing of the backwash filter. Inquiries or orders can be answered more quickly if you state the data indicated on the type designation plate. Please complete the form below in order to have the necessary data always at hand.

GENO® Backwash Filter MXA
Serial Number: ☐ ☐ ☐ ☐ ☐ ☐ / ☐
Order Number: ☐

2 Design

GENO® backwash filter, type MXA, for inline installation into the piping. The brass materials used are zinc-reduced. All parts coming into contact with the medium meet the requirements of the German Food and Commodities Act (LMBG).

3 Appropriate Application

GENO® backwash filters MXA are designed for the filtration of drinking and industrial water. They protect the water pipes and the connected water-carrying system components from malfunction and corrosion caused by undissolved impurities (particles) such as rust particles, sand, etc. They are equipped with a 100 µm filter element as standard.

After consultation with Grünbeck, it is also possible to use the backwash filters with special filter elements (50 µm, 200 µm or 500 µm) for filtration of well, process and cooling water. They are not suitable for chemically treated circulation water. If used for water containing coarse dirt particles, a coarse dirt trap must always be installed upstream of the backwash filter.

The filters are neither suitable for oils, fats, solvents, soaps and other greasy media nor for filtering water-soluble substances.

For filter elements 50 µm, 100 µm, 200 µm, 500 µm, refer to spare parts.

Note: The GENO® backwash filters MXA are exclusively suited for pressurised applications.

Also refer to the following note!